SERIAL ATA II PORT MULTIPLIER
XRS10L140/240/120/220
Evaluation Board User Manual

XRS10L140/240/120/220 Evaluation Board User Manual

Jan 16, 2008

1.0 OVERVIEW 3
Figure 1.0 XRS10L240/XRS10L140 Block Diagram 3
2.0 EVALUATION BOARD ARCHITECTURE 4
Figure 2.0 XRS10L140 Evaluation Board Rev 1.2 4
Figure 2.1 XRS10L240 photo 5
Figure 2.2 XRS10L140 Evaluation Kit 5
2.1 FUNCTIONALITY AND CONTROL 6
2.2 XRS10L140 REFERENCE CLOCK 6
2.3 MDIO BUS INTERFACE 7
Figure 2.3 MDIO Bus Interface 7
3.0 SETTING UP THE HARDWARE XRS10L140/240 EVALUATION BOARD 8
3.1 SETTING UP THE XRS10L240/XRS10L140 EVALUATION BOARD FOR SERIAL ATA 8
PORT MULTIPLIER TESTING 8
Figure 3.0 Serial ATA Port Multiplier Test Setup with four Hard Disk drives 8
3.2 SETTING UP THE XRS10L140/240 EVALUATION BOARD FOR SATA PROTOCOL TESTING 9
Figure 3.1 Protocol Testing with SAS/SATA Analyzer Test Setup 9
3.3 SETTING UP THE XRS10L240 EVALUATION BOARD FOR PORT SELECTOR TESTING 10
4.0 INSTALLING THE XRS10L240/XRS10L140 EVALUATION GUI 11
4.1 STARTING THE EVALUATION SOFTWARE 11
APPENDIX A. XRS10L140/240 EVALUATION BOARD SCHEMATICS 15
APPENDIX B. XRS10L140/240 EVAL BOARD LAYOUT FOR ALL LAYERS 22

1.0 OVERVIEW

BLOCK DIAGRAM OF XRS10L140/240

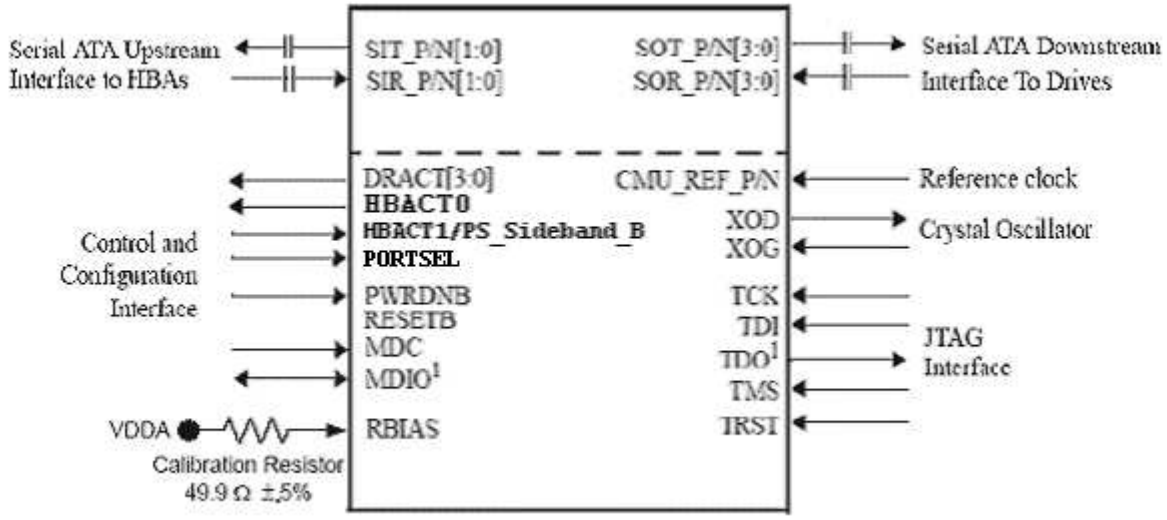

Figure 1.0 XRS10L240/XRS10L140 Block Diagram

This is evaluation board manual is intended to help the user become familiarized to operate the XRS10L140 Evaluation Demo Board and run Serial ATA protocol with minimum effort.

Requirements:

1. XRS10L140 Evaluation Demo board
2. 5.0V AC Adapter (or PC floppy drive power supply, or Lab power supply)
3. XRS10L140/120 data sheet
4. One PM-Aware SATA host port (to support multiple drives) or any legacy SATA host port (only drive on device port 0 can be recognized)
5. One or more Serial ATA hard drive(s) with SATA cables

Optional:

1. A Windows-XP/Window-2000 PC with a USB port (needed to change DUT settings from default)
2. XRS10L140 supplied GUI and USB driver to be installed on the PC (using Win98, 2000, or XP)
3. SAS/SATA Protocol Analyzer test equipment with SATA cables

2.0 Evaluation Board Architecture

XRS10L140 Evaluation Board provides a simple and efficient way to quickly evaluation functionality and performance of the XRS10L140 Serial ATA PORT MULTIPLIER.

Figure 2.0 XRS10L140 Evaluation Board Rev 1.2

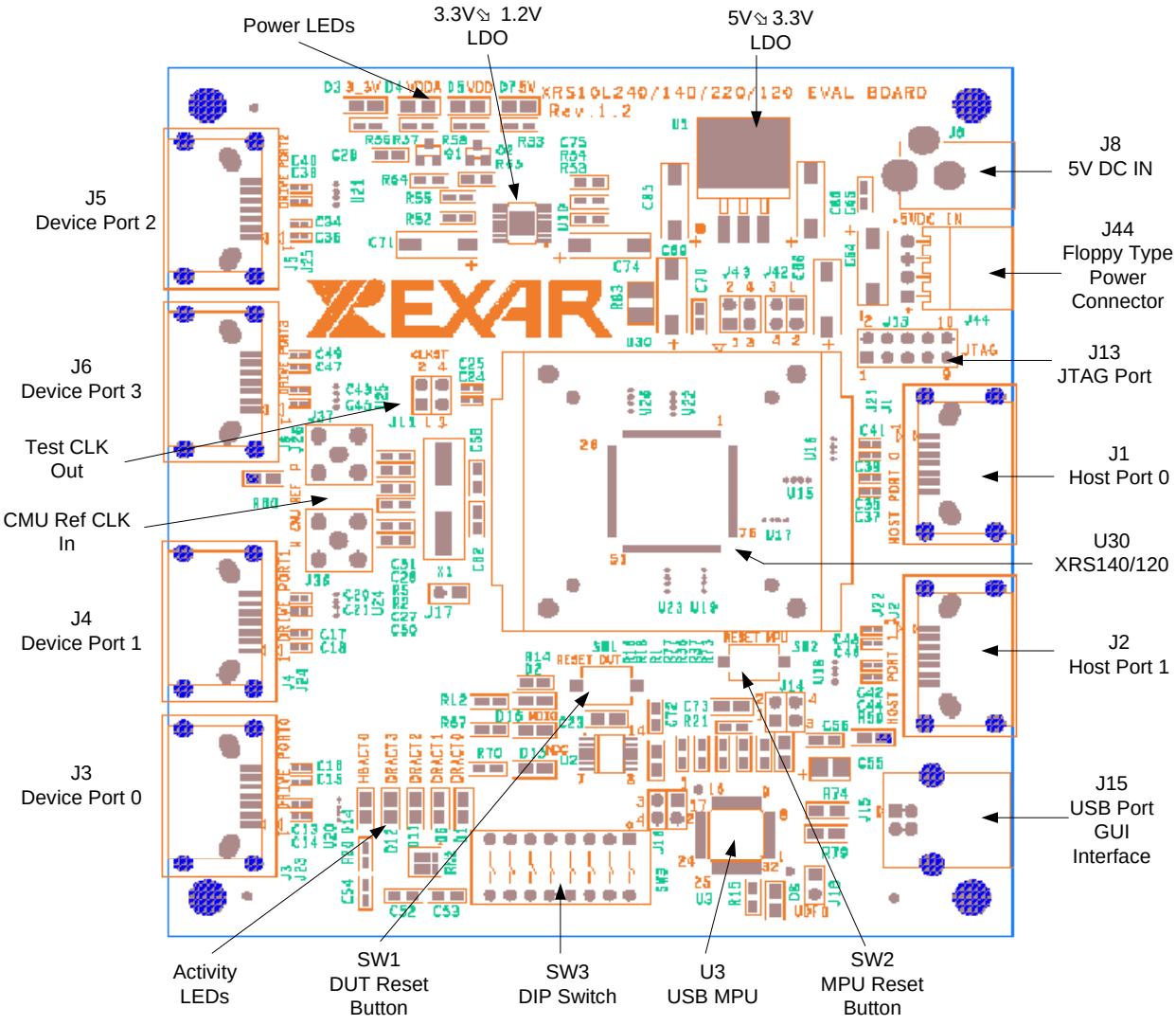

Evaluation board consists of XRS10L140 device (U30) connected to Five Serial ATA connectors J3,J4, J5,J6, J1 (J1 is a host port connection; J3,J4,J5 and J6 are use for SATA drive)

This evaluation board allows two different kinds of power supply connections:

A) External +5.0 volts power supply with minimum of 1.0 Amperes (AC adapter included in the kit), or
B) A PC floppy drive power supply connector

Figure 2.1 XRS10L240 photo

Figure 2.2 XRS10L140 Evaluation Kit

The evaluation board operates with 25Mhz XTAL reference clock. There are two SMA connectors (J36 and J37) for external reference clock input. The header connector (J11) has an output clock of XRS10L140 (it is primarily used for testing purpose). The DIP switch (SW3) has options to turn on transmit SSC (Spread-Spectrum Clocking) for host or/and drive ports, and to increase transmit amplitude for eSATA. These settings are read by on-board USB MPU, and program the chip through MDIO interface. Below is the list of DIP switch options:

Position	Name	OFF (up) meaning	ON (down) meaning	Default
1	PWRDNB	Normal Operation	Shut down the chip	OFF
2	PORTSEL	Used for 240	Select host 0	ON for 140
3	PS_Side_B	Used for 240	Select Sand_band PS mode	ON for 140
4	RSV	Not used now, TBD		OFF
5	SSC_HST_B	No SSC on host port	Enable SSC on host port Transmit	OFF
6	SSC_DRV_B	No SSC on host port	Enable SSC on drive ports transmit	OFF
7	HI_HST_B	For normal SATA(1i,2i) on host port	For eSATA (1m,2m)	OFF
8	HI_DRV_B	For normal SATA(1i,2i) on drive port	For eSATA (1m,2m)	OFF

The evaluation board has two RESET buttons: 'RESET MPU' (SW1) and 'RESET DUT' (SW2). 'RESET MPU' resets whole board. MPU will take the DIP switch settings and program DUT accordingly. 'RESET DUT' will reset DUT only; MPU will NOT program DUT; DUT will run with power-on default setting.

The Exar's supplied **G**raphical **U**ser **I**nterface (GUI) is used to program the XRS10L140 registers using the PC USB port. The USB cable connects from a PC USB port to the evaluation board connector J15. GUI is not necessary if customer just needs to run the DUT under default settings.

Evaluation Board operates with a single +5 volts power supply. The 5.0 volts power supply is step down to 3.3 volts using regulator U1. It is reduced further to 1.2 volts required by the XRS10L140/120 port multiplier. XRS10L120/220 Evaluation Boards are stuffing options on XRS10L140/240 Board.

2.1 FUNCTIONALITY AND CONTROL

The EXAR XRS10L140/240 is a Serial ATA II Port Multiplier designed for the next generation disk array system. The XRS10L140/240 port multiplier is a multiplexer where one active host connection is multiplexed to multiple device connections. The XRS10L140/240 can support up to 4 device connections and utilizes the full bandwidth of the host connection.

The high-speed serial input features selectable equalization adjustment and the high-speed serial output features selectable pre-emphasis to compensate for line loss and ISI (Inter-Symbol Interference), and to increase maximum cable distances

All XRS10L140/240 registers read/write access can be programmed using the graphical user interface via the Management Data Input Output (MDIO) bus.

2.2 XRS10L140 REFERENCE CLOCK

All XRS10L140/240 boards are shipped with a standard 25.0 MHz reference clock crystal. The 25.0 MHz crystal is fed to the XRS10L140's on-chip oscillator pins XOG/XOD.

External reference clock inputs can be applied to the port multiplier via SMA connectors J36, J37.

2.3 MDIO BUS INTERFACE

The Management Data Input Output (MDIO) port is used to configure the XRS10L140/240 registers. The MDIO interface is a 2-wire serial transaction with 64 MDC clock cycles. Each transaction start with 32 cycles preamble, 2 cycles start of frame, 2 cycles of OPCODE, 5 cycles of port address, 5 cycles of device address, 2 cycles turn around and 16 cycles of address/data. Figure 3 show a representative of a single Management Data Input Output (MDIO) transaction

The Management Data Input Output (MDIO) interface is defined in IEEE 802.3ae (clause 45). MDIO uses an open drain driver with external pull-up resistor to 3.3V. For more detail timing of MDIO Read/Write timing specification, please refer to XRS10L140/240 datasheet.

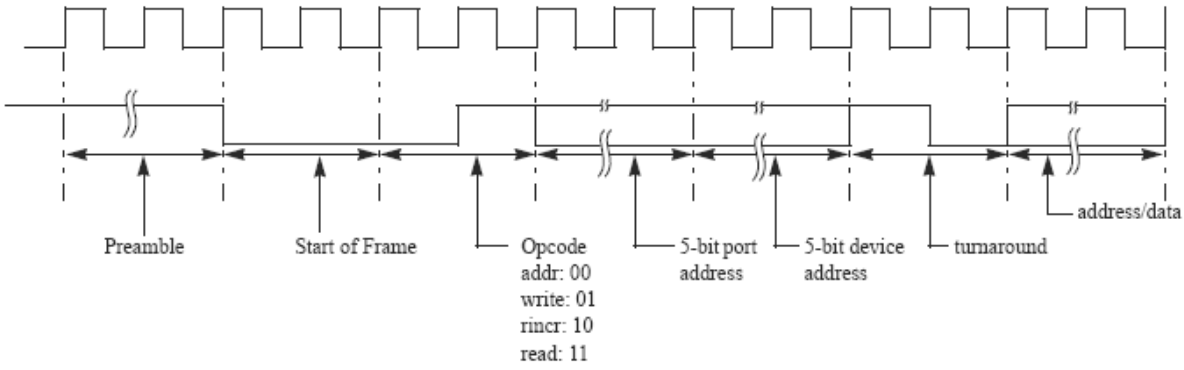

Figure 2.3 MDIO Bus Interface

3.0 SETTING UP THE HARDWARE XRS10L140/240 EVALUATION BOARD

The XRS10L140 Evaluation Board can be used to test Serial ATA port multiplier functionality and monitor SAS/SATA protocol. The following sections cover the differences in each setup.

3.1 Setting up the XRS10L240/XRS10L140 Evaluation Board for Serial ATA port multiplier (With Serial ATA hard disk drives)

3.2 Setting up the XRS10L240/XRS10L140 Evaluation Board for SATA protocol testing (Need to have SATA protocol tracer or analyzer, Lecroy's Model SAS-001MA)

3.3 Setting up the XRS10L240 Evaluation Board for Port Selector testing

3.1 SETTING UP THE XRS10L240/XRS10L140 EVALUATION BOARD FOR SERIAL ATA PORT MULTIPLIER TESTING

To successfully perform this test, you must have the following equipment:

- XRS10L240/XRS10L140 Evaluation Board
- 5.0 Volts Power Supply capable of delivering minimum 1 ampere.
- Four Serial ATA hard disk Drive
- Five Serial ATA cables
- Serial ATA Host Bus Adaptor

Startup procedure:

1. Connect 5.0V power supply to connector J8.
2. Turn on power and verify power supply on the board by checking Power LED and output of power regulator U1, U10.
3. Turn off power supply to evaluation board
4. Connect the Serial ATA flex-cable from Evaluation Drive ports (J3, J4, J5, or J6) to Serial ATA hard disk drives. Verify the power connector of Serial ATA hard-disk drive.
5. Set SSC and amplitude options through DIP switch SW3 or leave them as default.
6. Turn on Power Supply, press RESET MPU button on XRS10L140/240 Evaluation Board (SW2)
7. Connect the Serial ATA flex-cables from PC Host Bus Adaptor output to Evaluation Board host Port 0 (J1).

Optional steps(8 to 10) to access the MDIO registers:

8. Connect a USB cable from a PC USB port to evaluation board connector J15
9. Install USB driver from the included CD (under CD root directory) if asked by Windows.
10. Install the GUI (if haven't done before) by double-clicking the installer icon "XRS10L140 setup.exe" in the CD.

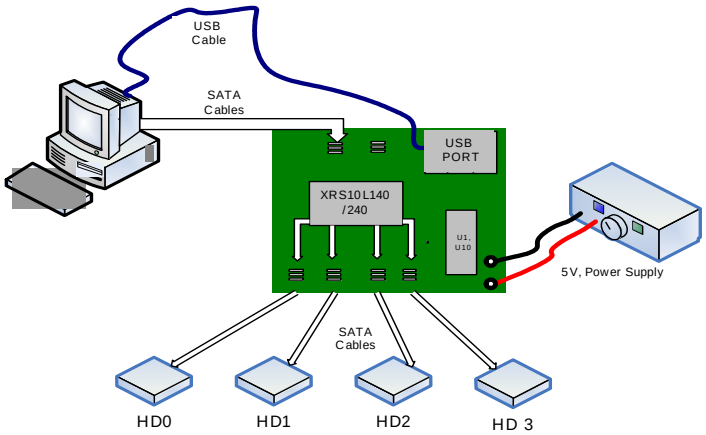

Figure 3.0 Serial ATA Port Multiplier Test Setup with four Hard Disk drives

3.2 SETTING UP THE XRS10L140/240 EVALUATION BOARD FOR SATA PROTOCOL TESTING

To successfully perform this test, you must have the following equipments:

- XRS10L240/XRS10L140 Evaluation Board
- SAS/SATA Protocol Analyzer System (Lecroy's Model SAS 001MA)
- Personal Computer with USB Port and SAS/SATA Analyzer software control via USB

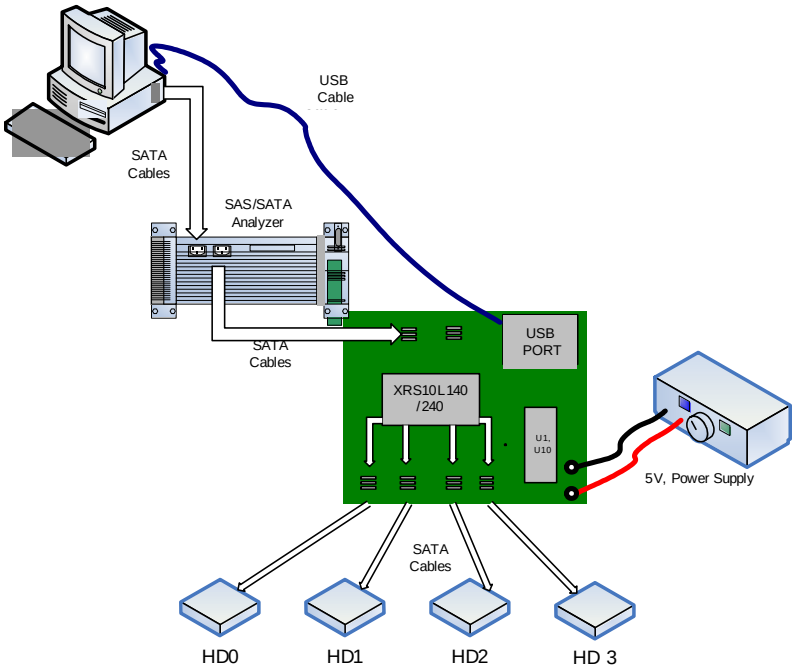

Figure 3.1 Protocol Testing with SAS/SATA Analyzer Test Setup

Startup procedure:

1. Connect 5.0 volts power supply to board connector.
2. Connect the SATA cables from PC host bus adaptor to SAS/SATA Analyzer "Initiator" port
3. Connect the SATA cables from Drive Port outputs to Serial ATA hard disk drive.
4. Set SSC and amplitude options through DIP switch SW3 or leave them as default.
5. Turn on Power Supply, press RESET MPU button on XRS10L140/240 Evaluation Board (SW2).
6. Connect the SATA cables from SAS/SATA "target" port to Evaluation board Host Port 0 (J21).
7. Press Run button on the SAS/SATA Analyzer
8. Connect a USB cable from a PC USB port to evaluation board connector J15.
9. Install USB driver from the included CD (under CD root directory) if asked by Windows.
10. Install the GUI (if haven't done before) by double-clicking the installer icon "XRS10L140 setup.exe" in the CD.

Note 1. Difference between two RESET buttons: 'RESET MPU' will reset whole board. MPU will take the DIP switch settings and program DUT accordingly. 'RESET DUT' will reset DUT only, MPU will NOT program DUT anyway, DUT will go to power-on default state.

Note 2. Steps 8 to 10 are not necessary if customer just needs to run the DUT under default setting.

3.3 SETTING UP THE XRS10L240 EVALUATION BOARD FOR PORT SELECTOR TESTING

XRS10L240 has an active-passive SATA Port Selector. User can choose the active port through protocol (SATA Port Selector Signature), pin, or register bit. After hardware reset, chip will check if pin selection is enabled by pin PS_Sideband_B (low active). If yes, chip will choose the active host port base on pin PORTSEL. Otherwise, it will default to protocol selection. In the protocol selection mode, if no PS signature is received, the port receives OOB(COMRESET or COMWAKE) first becomes active port. User can switch the active port afterwards. For register bit selection, 2 scripting files ("PortSelector_Set_Active_to_host0.txt" and "PortSelector_Set_Active_to_host1.txt") are included to show the procedure.

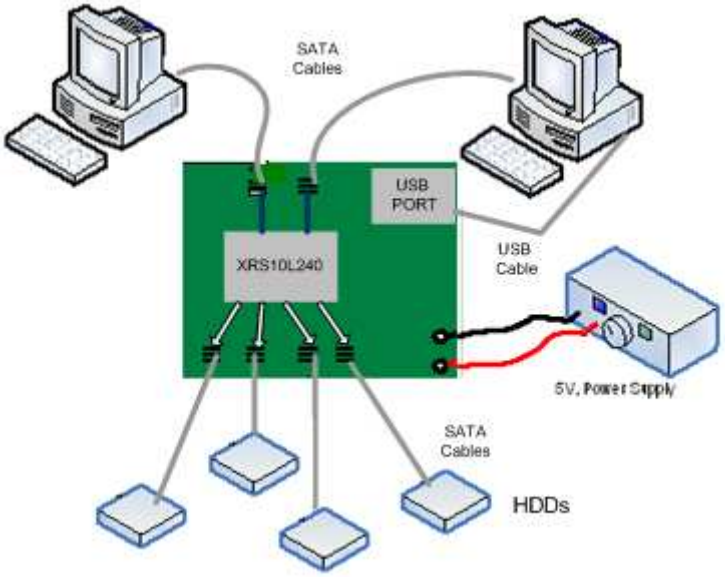

Figure 3.2 Serial ATA Port Selector Test Setup with four Hard Disk drives

4.0 INSTALLING THE XRS10L240/XRS10L140 EVALUATION GUI

To install the XRS10L140 GUI, double click on the installation file enclosed in the CD, as part of the evaluation package. It will place the relevant GUI files in an EXAR created folder. The installation program by default will copy all the files onto c:\Program File\Exar\XRS10L140 Evaluation directory.

4.1 STARTING THE EVALUATION SOFTWARE

The evaluation software allows the user to do the following:

- Configure the XRS10L140 for proper operation using the script file
- Programming MDIO individual registers value.

Once the XRS10L140 GUI is installed, it can be found through the **Start Menu->Exar->XRS10L140 Evaluation**. Once selected, it will open up the application.

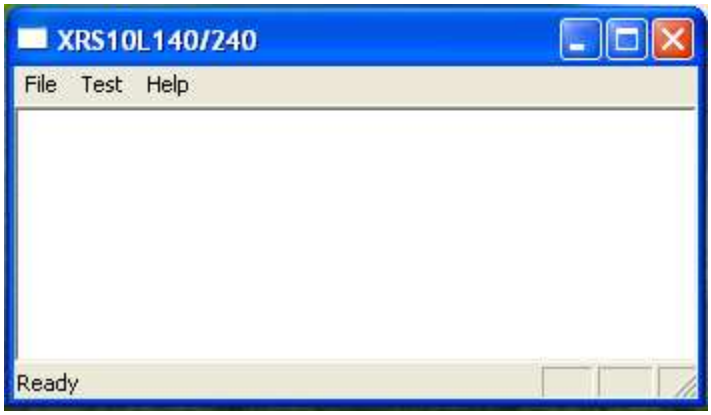

Steps to Configure the XRS10L140/240 Evaluation board through GUI.

1. Connect the power supply to the board (all power is derived from the 5.0 volts supply).
2. Connect from USB Port to the evaluation board J15 connector.
3. Connect Serial ATA cables from J3, J4, J5 and J6 to SATA drives.
4. Power up the system and press the RESET MPU button.
5. The Evaluation Board is ready for script download.

Under Menu **Test**, select **Script Interface**

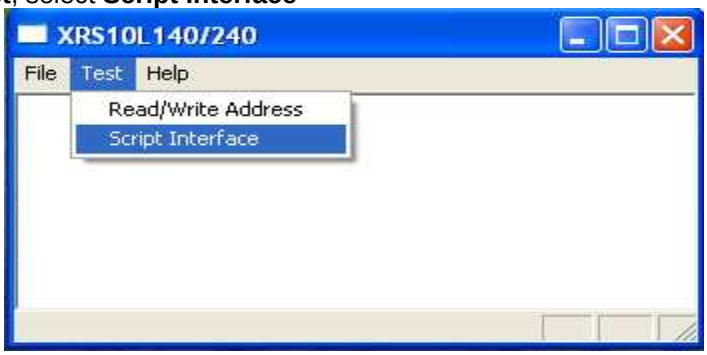

The Graphical User Interface will open up another dialog box.

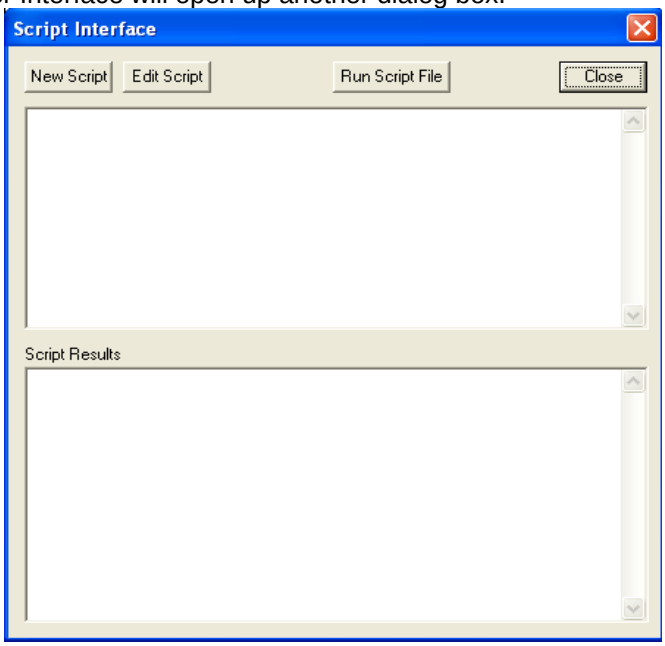

Select “Run Script File”. Under directory XRS10L140 Evaluation\Scripts, select one of the script files as needed. Such as “RevC_SSC_HST.txt” will enable SSC on host port.

Please wait about 1 sec for the GUI to load the registers setting. After successfully program registers, the following dialog is display

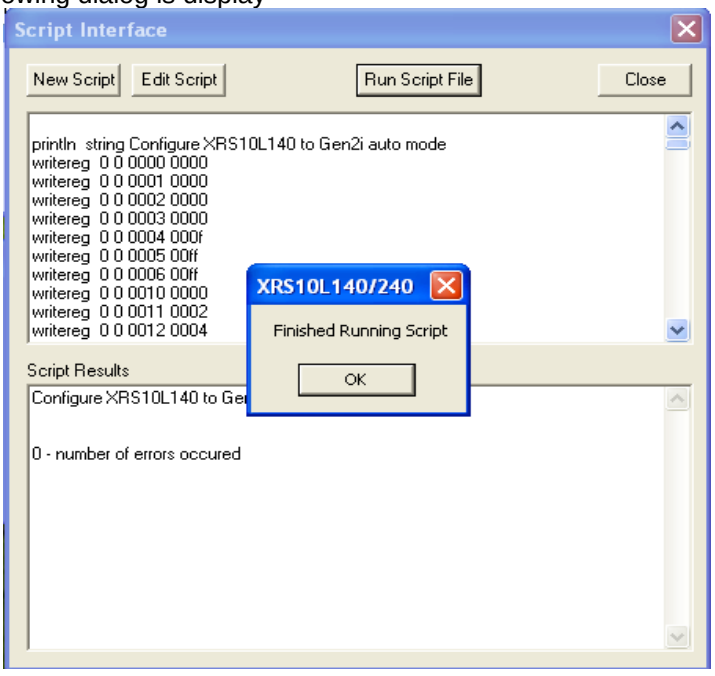

Select the OK button, and then connect the Serial ATA cable from your PC SATA Host adaptor to Evaluation Board Host Port 0 (J1 connector).

In order to verify the status of your attached hard-drive, right click your mouse on “My Computer”, then choose manage option. Click the Disk Management utility. The following screen is displaying the four Serial ATA hard disk drives
(Disk1, Disk2, Disk3, and Disk4 are for Port0, Port1, Port2, and Port3 of XRS10L140 evaluation board).

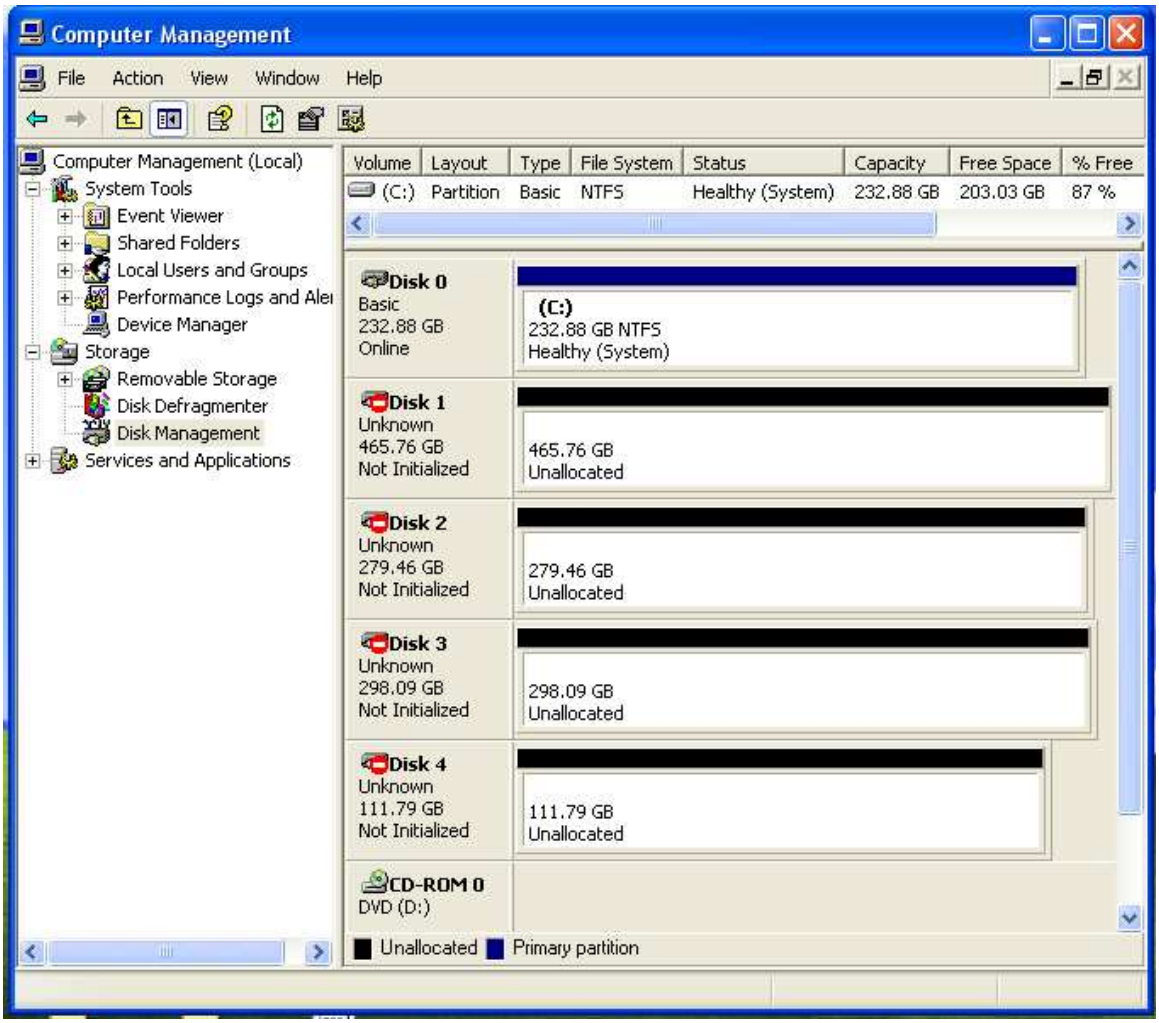

XRS10L140 individual register can be programmed using the Read/Write Address option under Test menu. Under the **Test** menu, select the **Read/Write Address** sub-menu. The following dialog box allow user to perform the Read/Write access to all MDIO device registers.

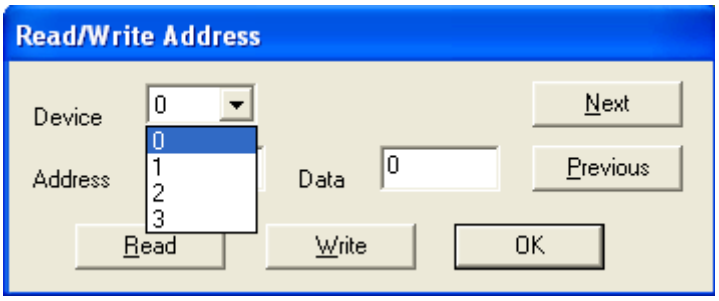

MDIO Device 0,1,2, and 3 can be selected under Device Drop-down box.
Press ***Next*** to increase the register address by one location.
Press ***Previous*** to decrease the register address by one location
Press ***Read*** to read-back register content
Press ***Write*** to program data value to XRS10L140 register
Press ***OK*** to close the Read/Write Address dialog box.

APPENDIX A. XRS10L140/240 EVALUATION BOARD SCHEMATICS

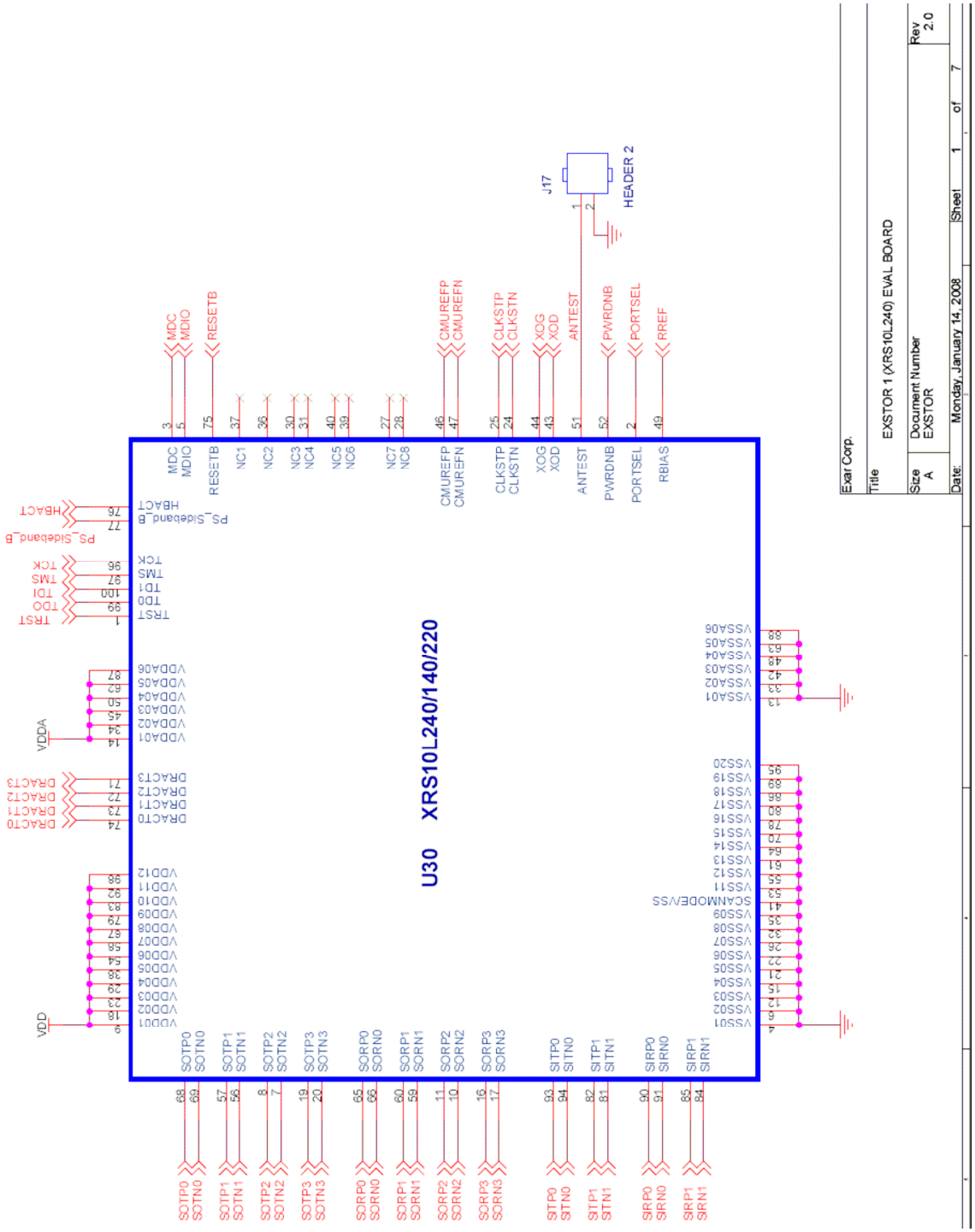

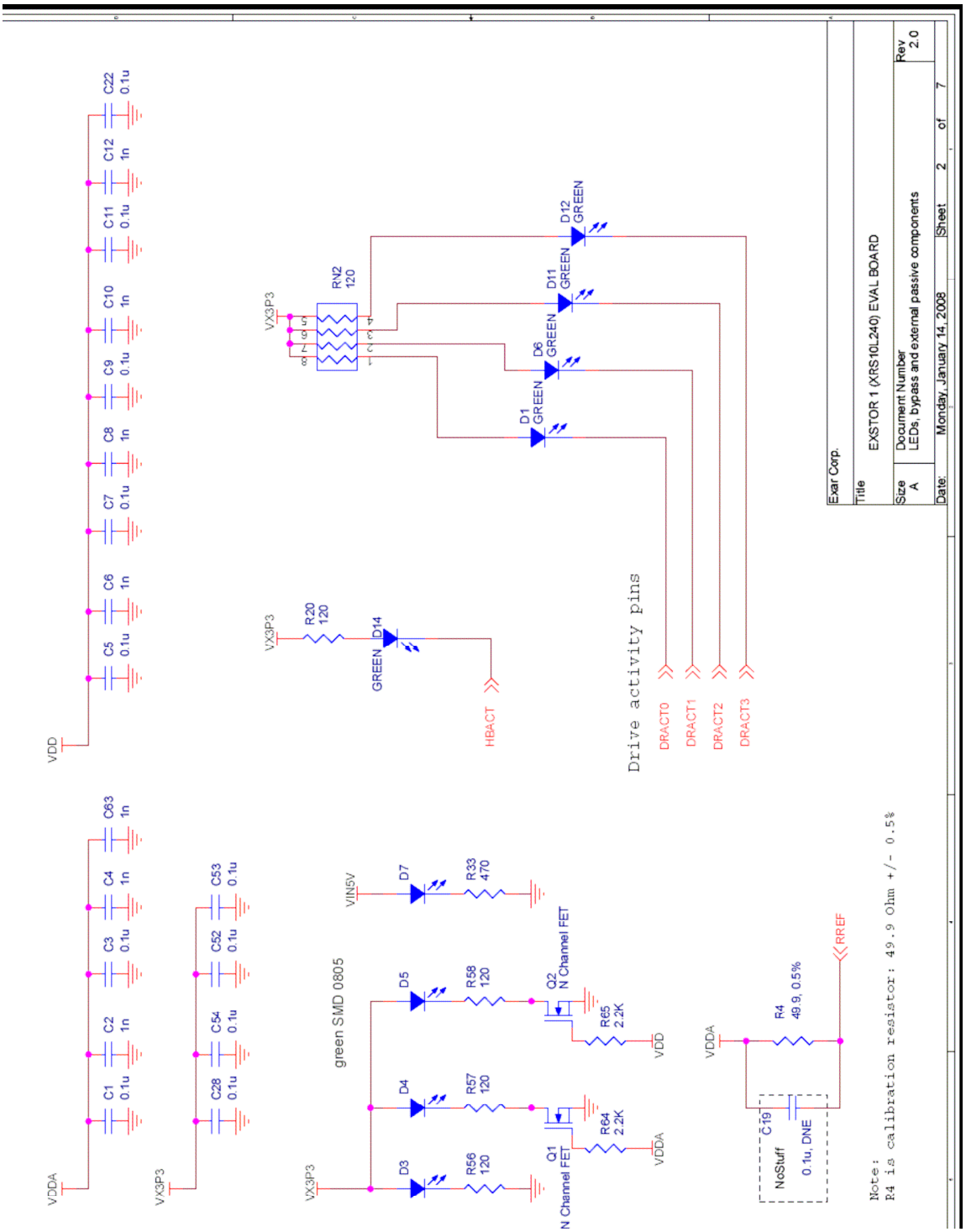
C22 0.1u
C12 1n
C11 0.1u
C10 1n
C9 0.1u
C8 1n
C7 0.1u
C6 1n
C5 0.1u
VDD
RN2 120
VX3P3
D12 GREEN
D11 GREEN
D6 GREEN
D1 GREEN
R20 120
D14 GREEN
HBACT
Drive activity pins
DRACT0
DRACT1
DRACT2
DRACT3
Exar Corp.
Title
EXSTOR 1 (XRS10L240) EVAL BOARD
Size A
Document Number
LEDs, bypass and external passive components
Rev 2.0
Date: Monday, January 14, 2008
Sheet 2 of 7
C83 1n
C4 1n
C3 0.1u
C2 1n
C1 0.1u
VDDA
C53 0.1u
C52 0.1u
C54 0.1u
C28 0.1u
VX3P3
VIN5V
D7
R33 470
green SMD 0805
D5
R58 120
Q2 N Channel FET
R65 2.2K
D4
R57 120
R64 2.2K
Q1 N Channel FET
D3
R56 120
VDD
VDDA
RREF
R4 49.9, 0.5%
C19 NoStuff 0.1u, DNE
Note:
R4 is calibration resistor: 49.9 Ohm +/- 0.5%

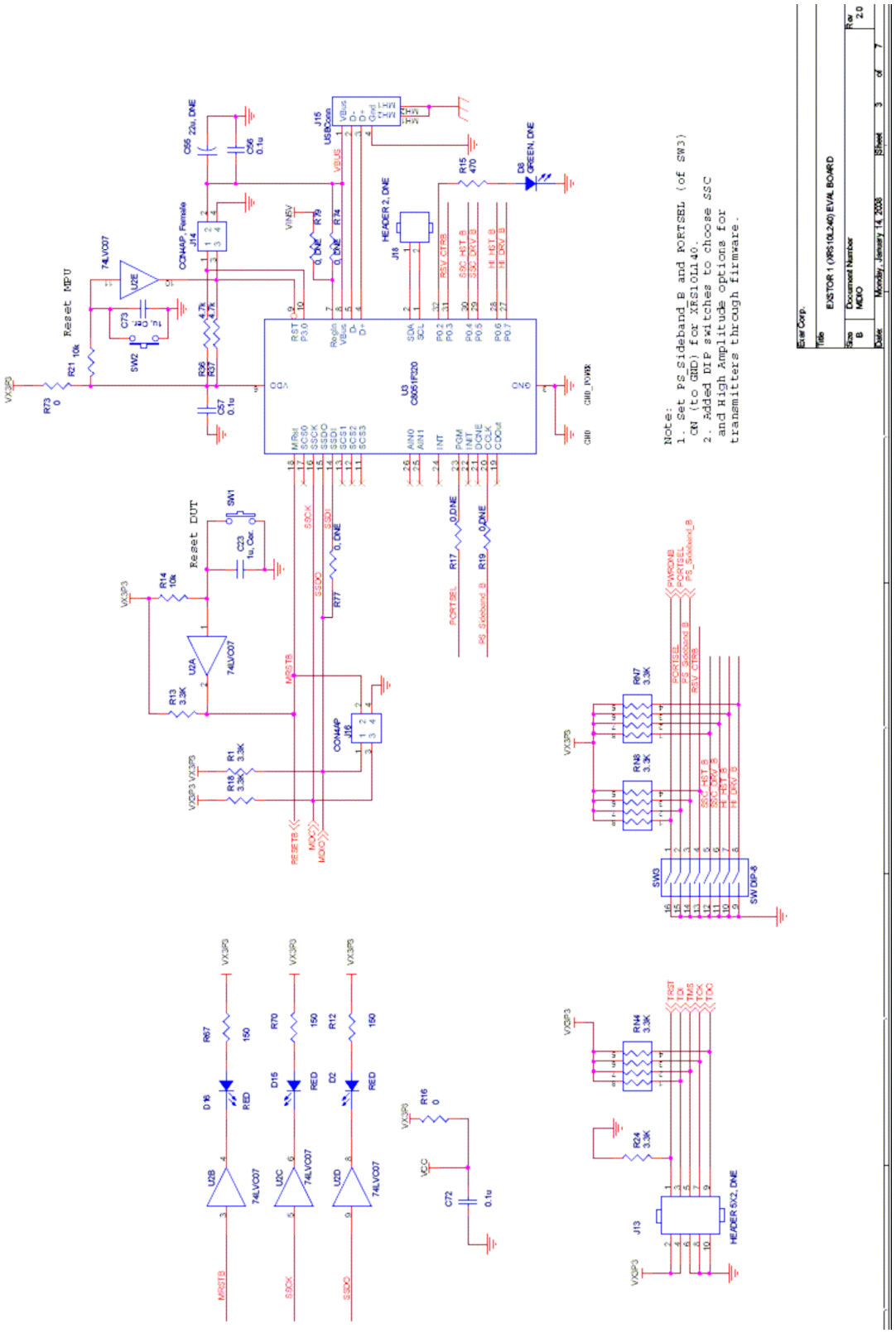
Note:
1. Set PS_Sideband_B and PORTSEL (of SW3) ON (to GND) for XRS10L140.
2. Added DIP switches to choose SSC and High Amplitude options for transmitters through firmware.
Exar Corp.
Title
EXSTOR 1 (XRS10L240) EVAL BOARD
Size
B
Document Number
MDIO
Rev
2.0
Date: Monday, January 14, 2008
Sheet 3 of 7
Reset MPU
Reset DUT
74LVC07
CON4AP, Female
HEADER 2, DNE
HEADER 5X2, DNE
GREEN, DNE
SW DIP-8
SW3
SW1
SW2
U3
C8051F320
U2A
U2B
U2C
U2D
U2E
J13
J14
J15
J16
J18
D8
D16
D15
D2
VX3P3
VCC
VIN5V
VBUS
GND
GND_PWR
MRSTB
SSCK
SSDO
SSDI
PORTSEL
PS_Sideband_B
PWRDNB
RSV CTRB
SSC HST B
SSC DRV B
HI HST B
HI DRV B
TRST
TDI
TMS
TCK
TDO
RESETB
MDIO
MDIO

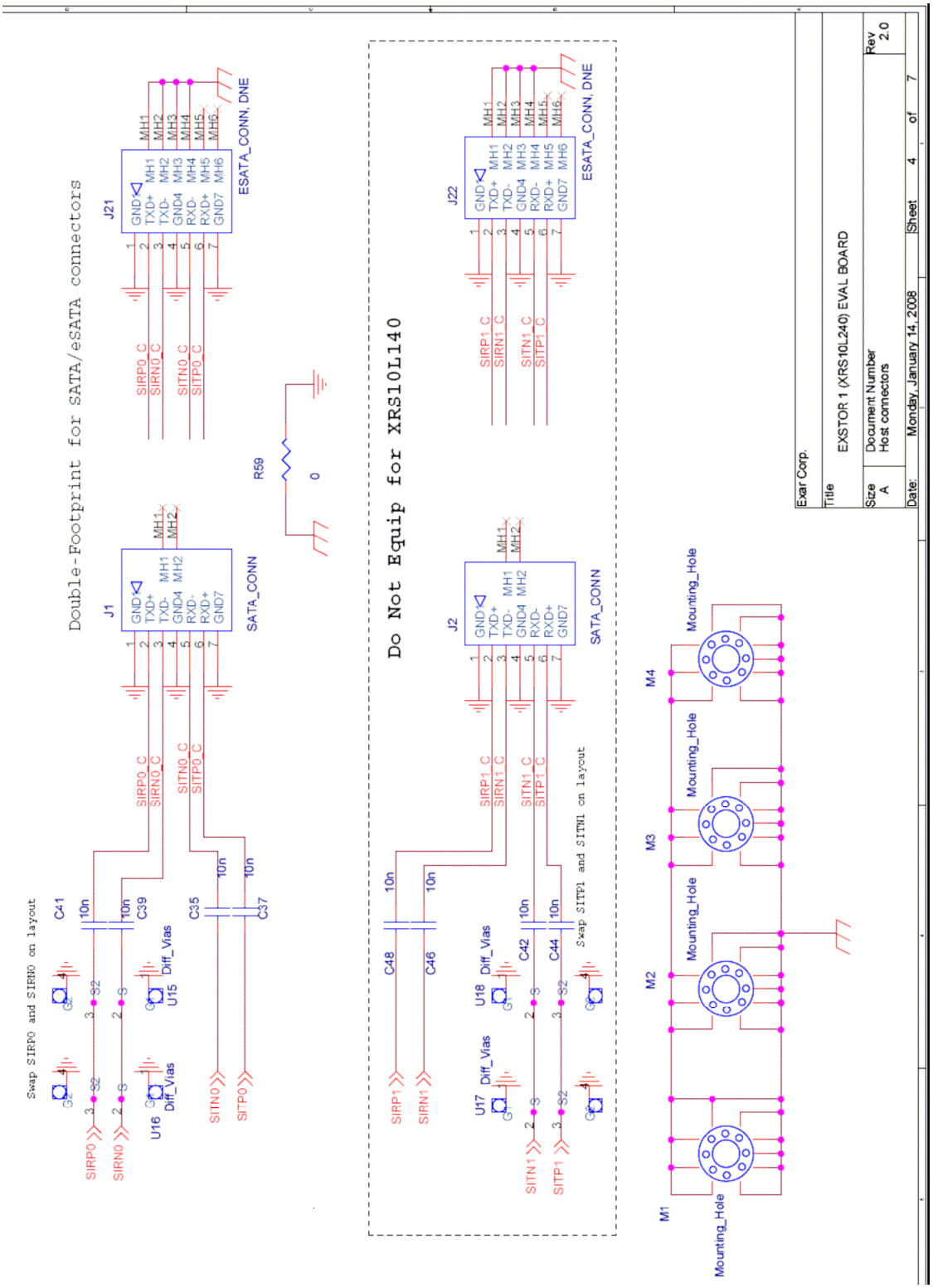
Double-Footprint for SATA/eSATA connectors
Do Not Equip for XRS10L140
J1
J2
J21
J22
SATA_CONN
ESATA_CONN, DNE
R59
0
Swap SIRP0 and SIRN0 on layout
Swap SITP1 and SITN1 on layout
Diff_Vias
Mounting_Hole
Exar Corp.
Title
EXSTOR 1 (XRS10L240) EVAL BOARD
Size
A
Document Number
Host connectors
Rev
2.0
Date:
Monday, January 14, 2008
Sheet
4
of
7

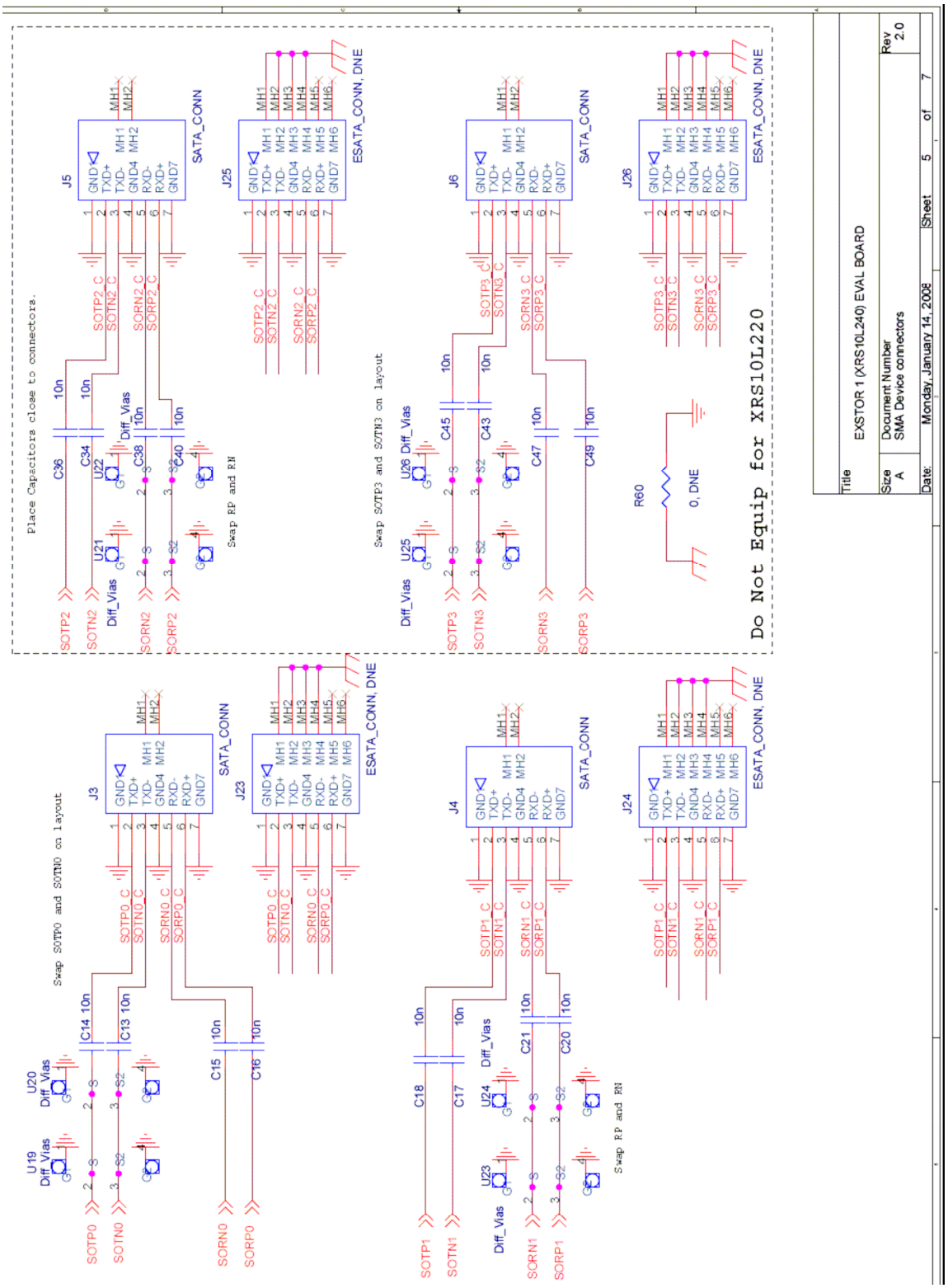
Place Capacitors close to connectors.
Swap SOTP2 and SOTN2 on layout
Swap RP and RN
Swap SOTP3 and SOTN3 on layout
Swap RP and RN
Swap SOTP0 and SOTN0 on layout
Swap RP and RN
Do Not Equip for XRS10L220
0, DNE
SATA_CONN
ESATA_CONN, DNE
Diff_Vias
Title
EXSTOR 1 (XRS10L240) EVAL BOARD
Size
A
Document Number
SMA Device connectors
Rev
2.0
Date:
Monday, January 14, 2008
Sheet
5
of
7

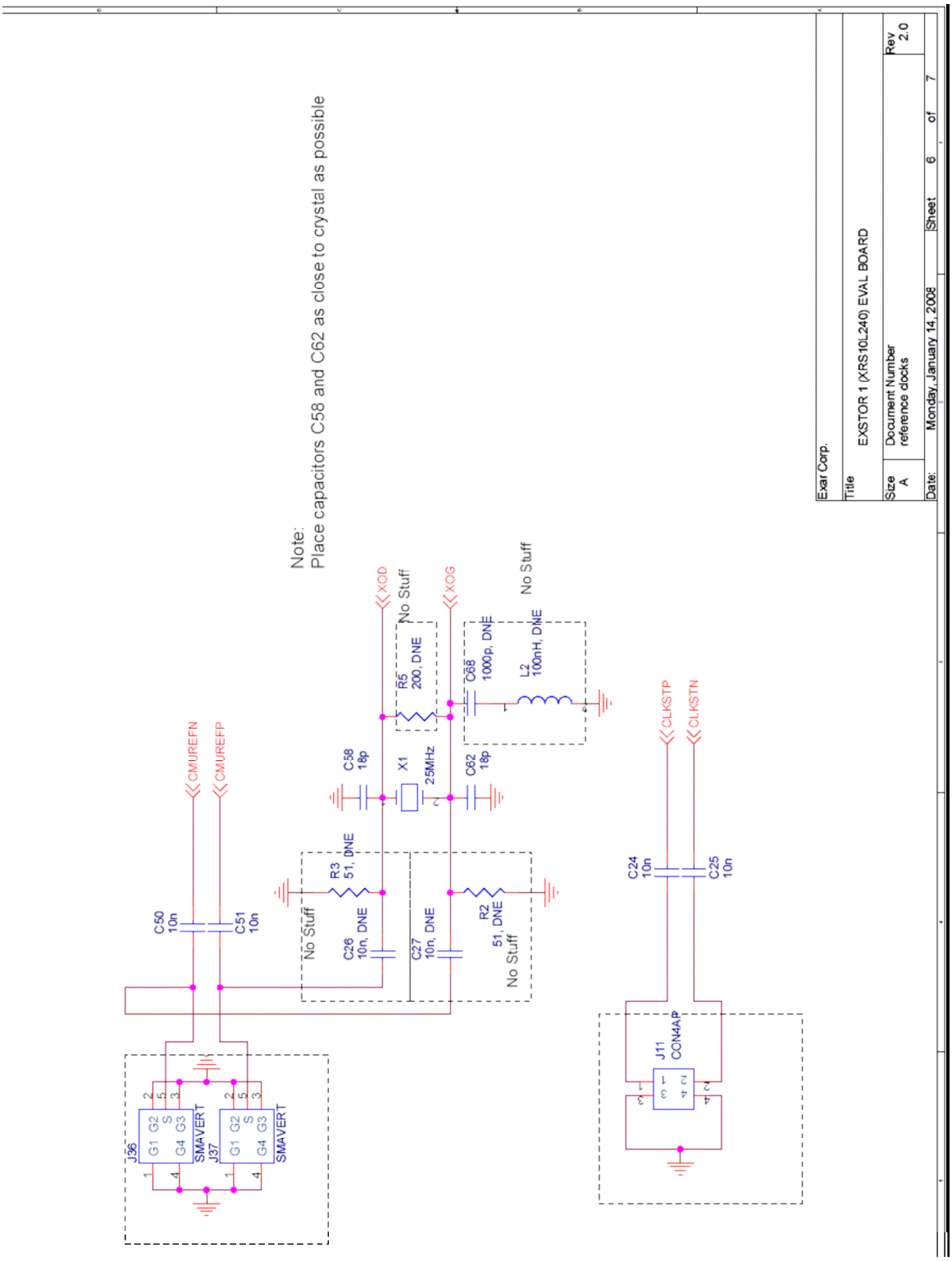
Note:
Place capacitors C58 and C62 as close to crystal as possible
Exar Corp.
Title
EXSTOR 1 (XRS10L240) EVAL BOARD
Size
A
Document Number
reference clocks
Rev
2.0
Date:
Monday, January 14, 2008
Sheet
6
of
7
XOD
XOG
No Stuff
R5
200, DNE
C58
18p
X1
25MHz
C62
18p
C68
1000p, DNE
L2
100nH, DNE
CMUREFN
CMUREFP
R3
51, DNE
C26
10n, DNE
C27
10n, DNE
R2
51, DNE
C50
10n
C51
10n
CLKSTP
CLKSTN
C24
10n
C25
10n
J11
CON4AP
J36
J37
SMAVERT

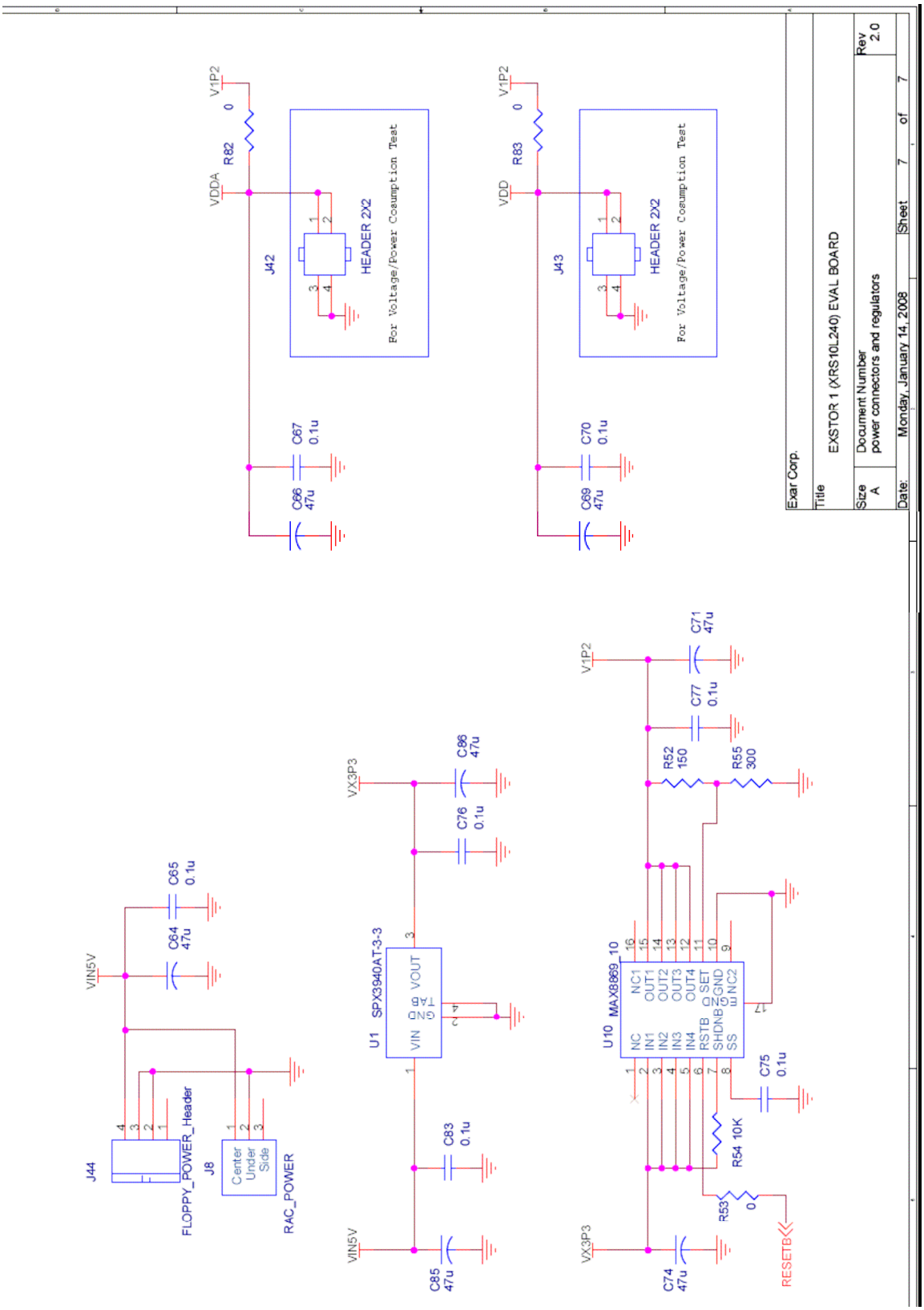
V1P2
R82
0
VDDA
J42
HEADER 2X2
For Voltage/Power Cosumption Test
C67
0.1u
C66
47u
R83
VDD
J43
C70
C69
Exar Corp.
Title
EXSTOR 1 (XRS10L240) EVAL BOARD
Size
A
Document Number
power connectors and regulators
Rev
2.0
Date:
Monday, January 14, 2008
Sheet
7
of
7
C71
47u
C77
0.1u
R52
150
R55
300
VX3P3
C86
47u
C76
0.1u
C65
0.1u
C64
47u
VIN5V
U1
SPX3940AT-3-3
VIN
VOUT
GND
TAB
U10
MAX8869
NC
IN1
IN2
IN3
IN4
RSTB
SHDN
SS
SET
GND
NC1
OUT1
OUT2
OUT3
OUT4
NC2
C75
0.1u
R54
10K
R53
0
RESETB
C83
0.1u
C85
47u
C74
47u
J44
FLOPPY_POWER_Header
J8
Center
Under
Side
RAC_POWER

APPENDIX B. XRS10L140/240 EVAL BOARD LAYOUT FOR ALL LAYERS

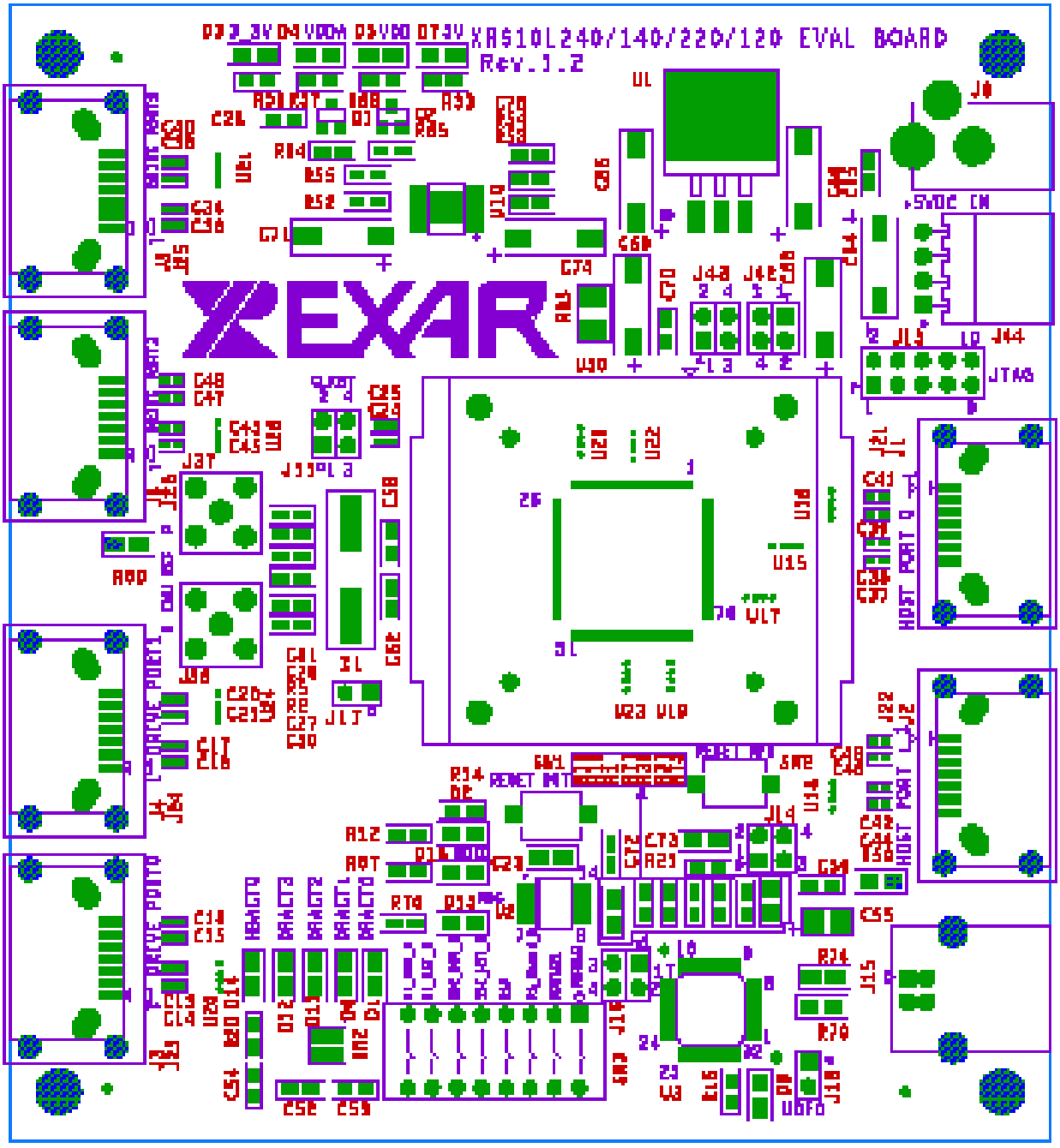

TOP Assembly

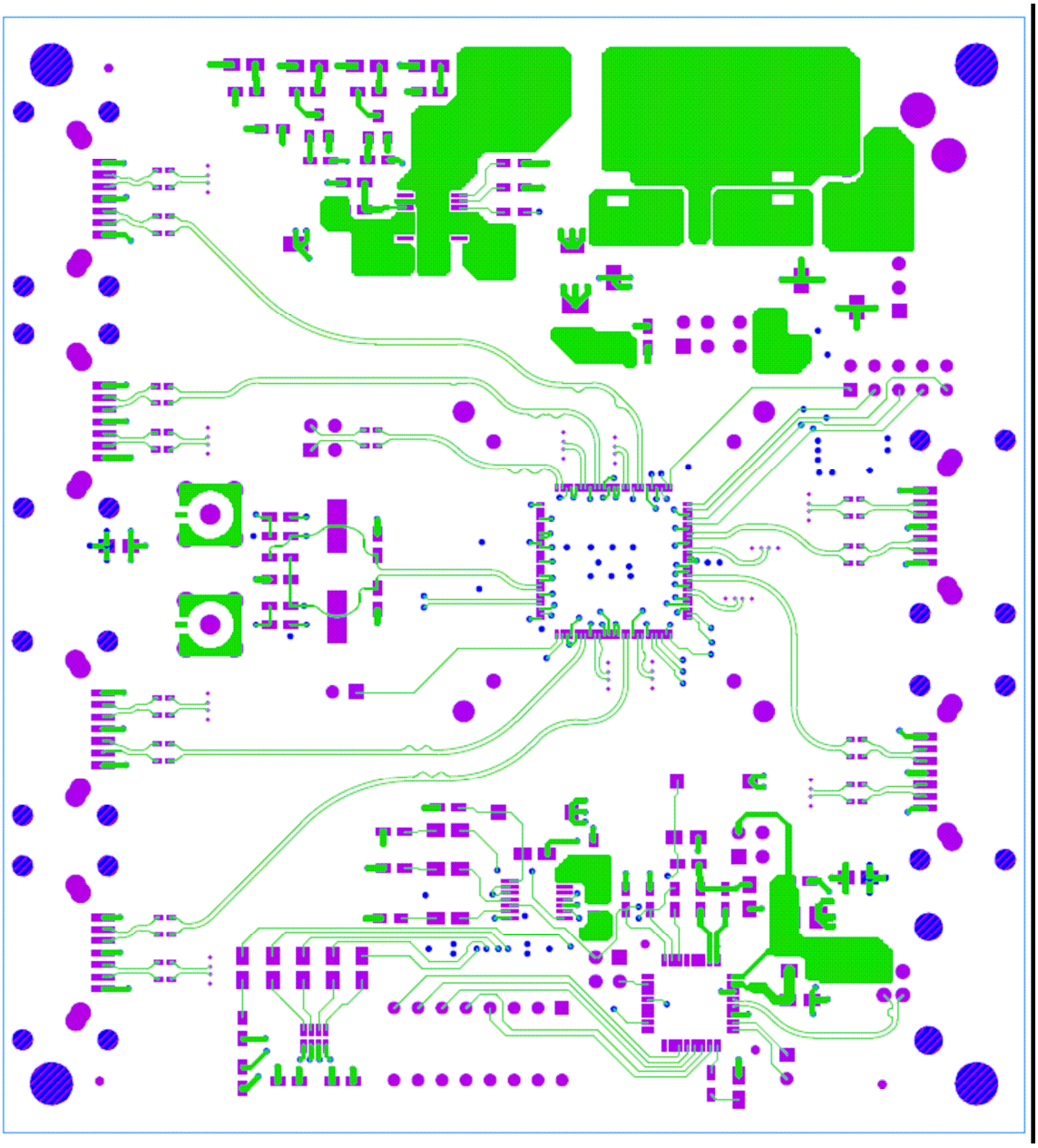

Layer 1

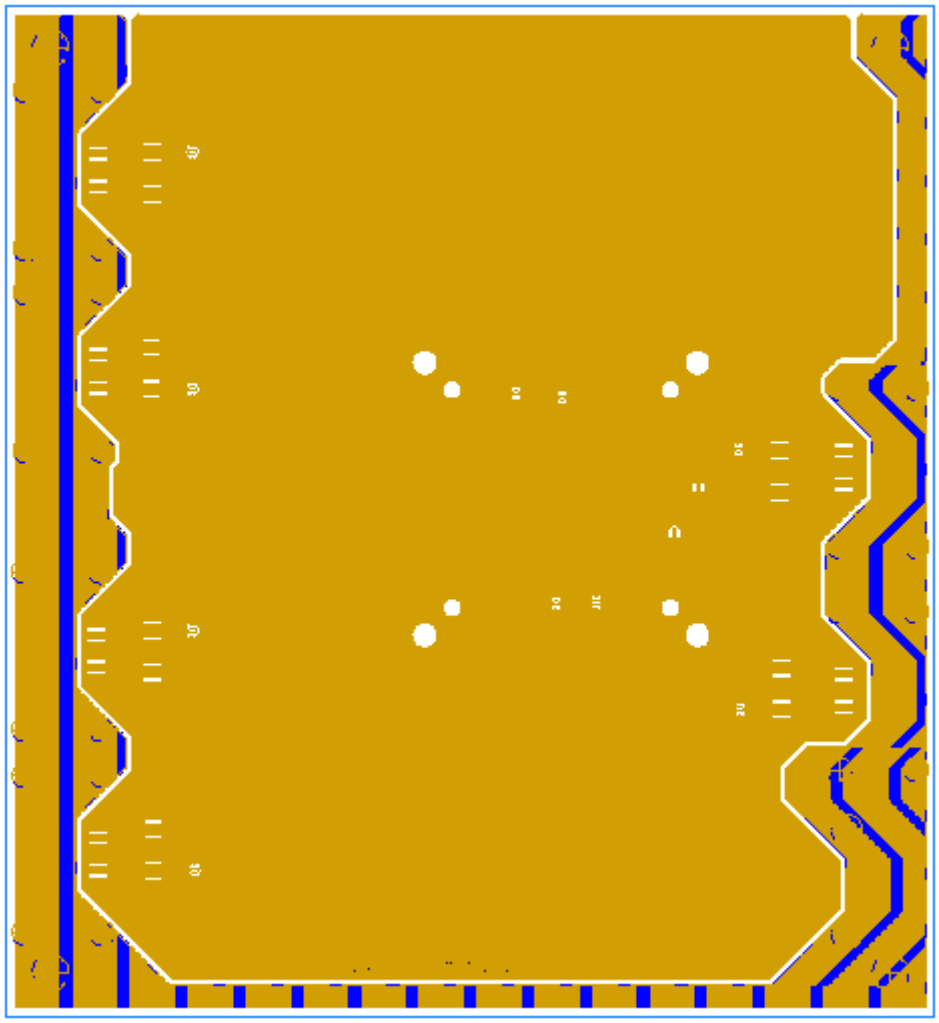

Layer 2: GND

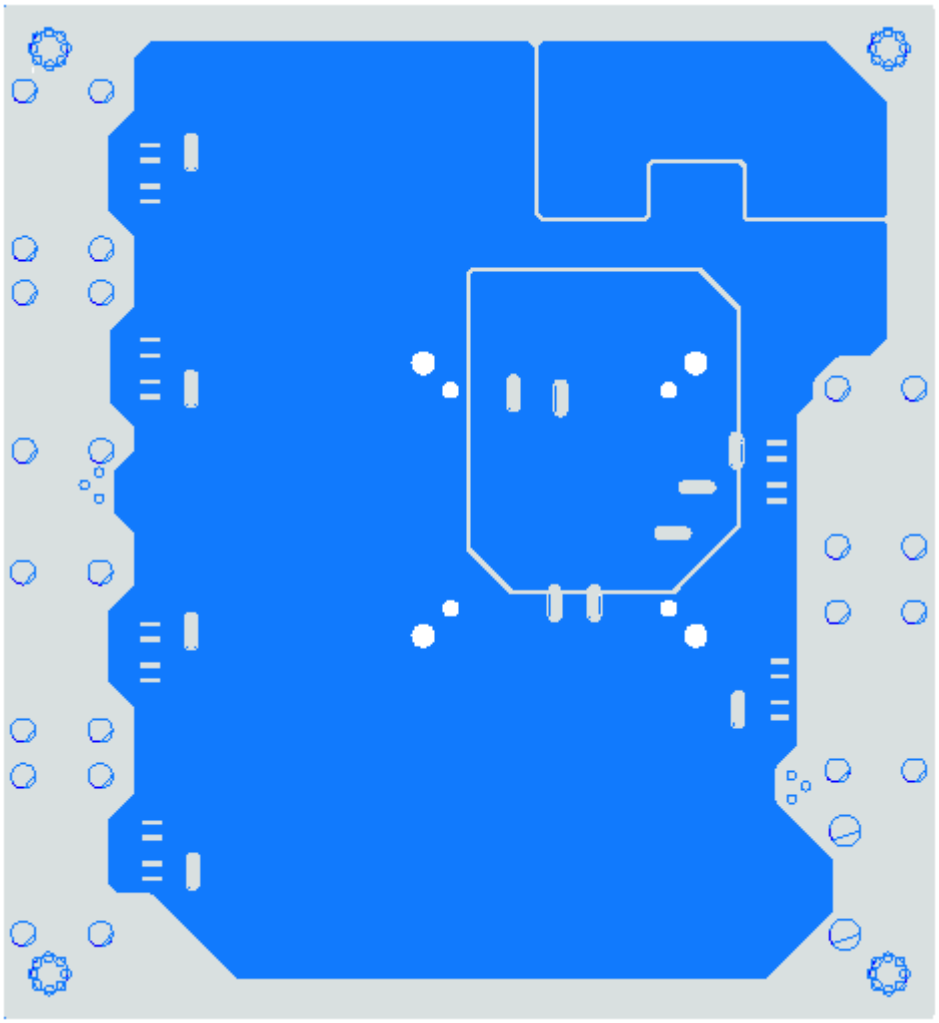

Layer 3: PWR 1

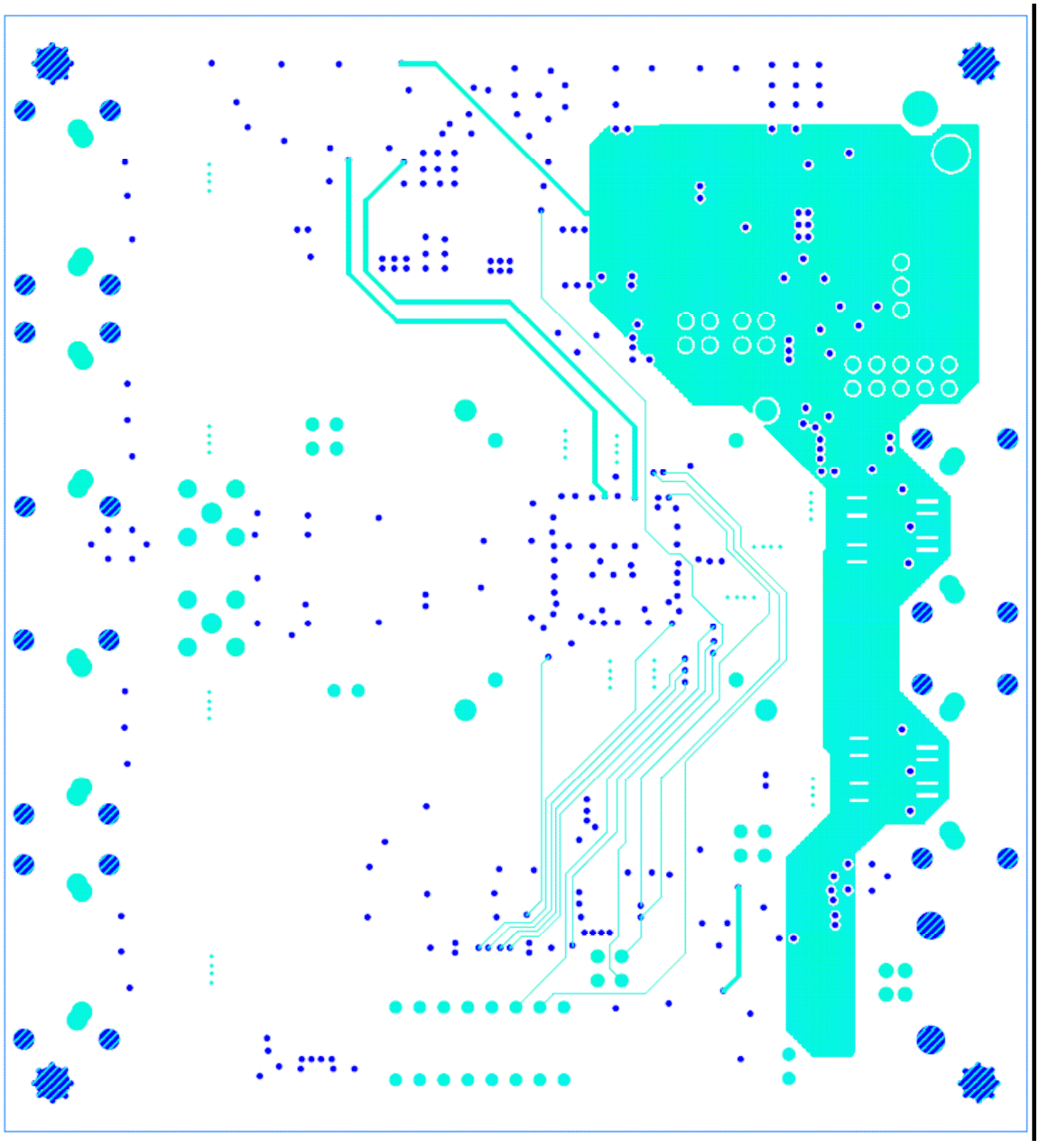

Layer 4: Signal

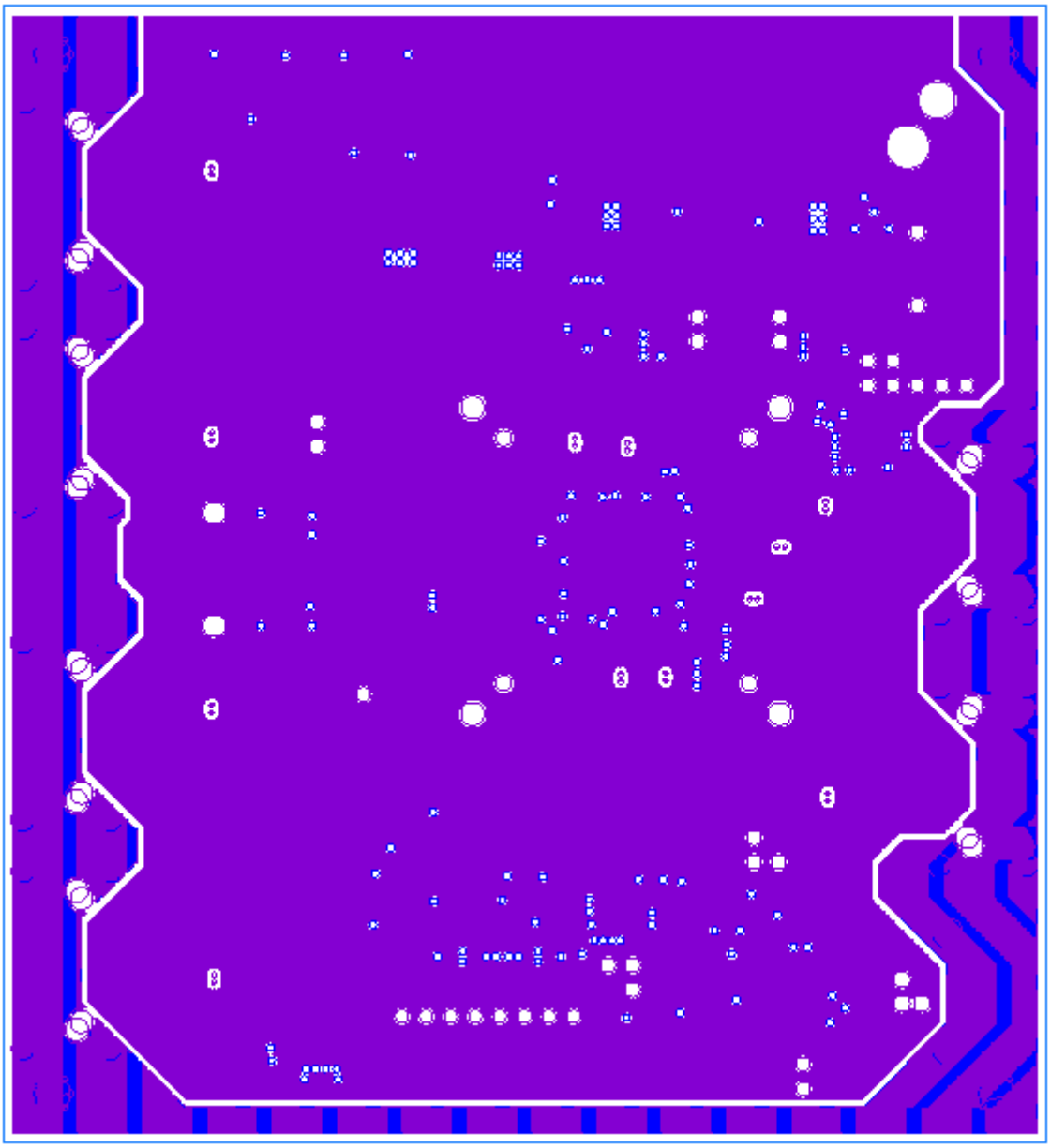

Layer 5: GND

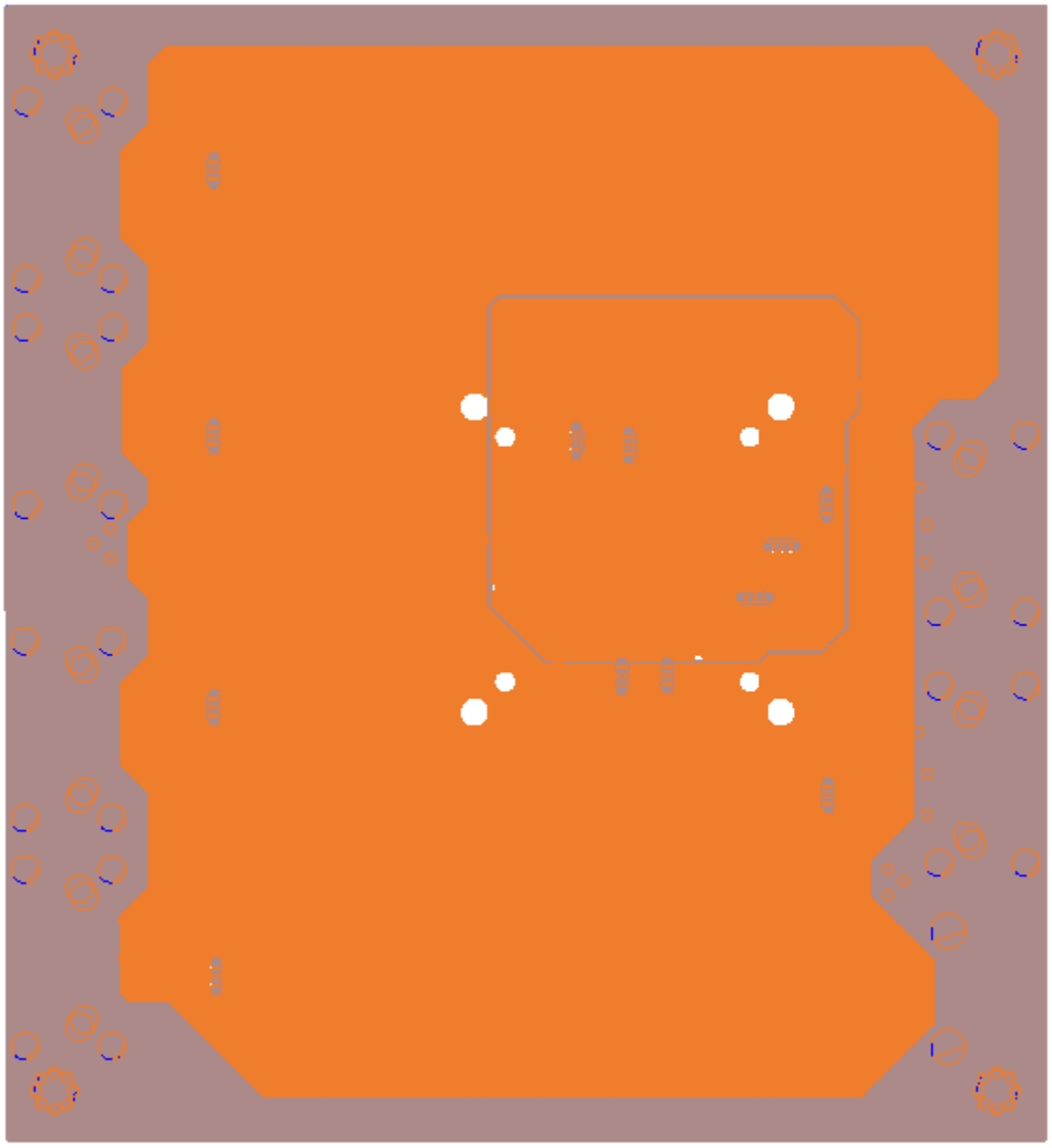

Layer 6: PWR 2

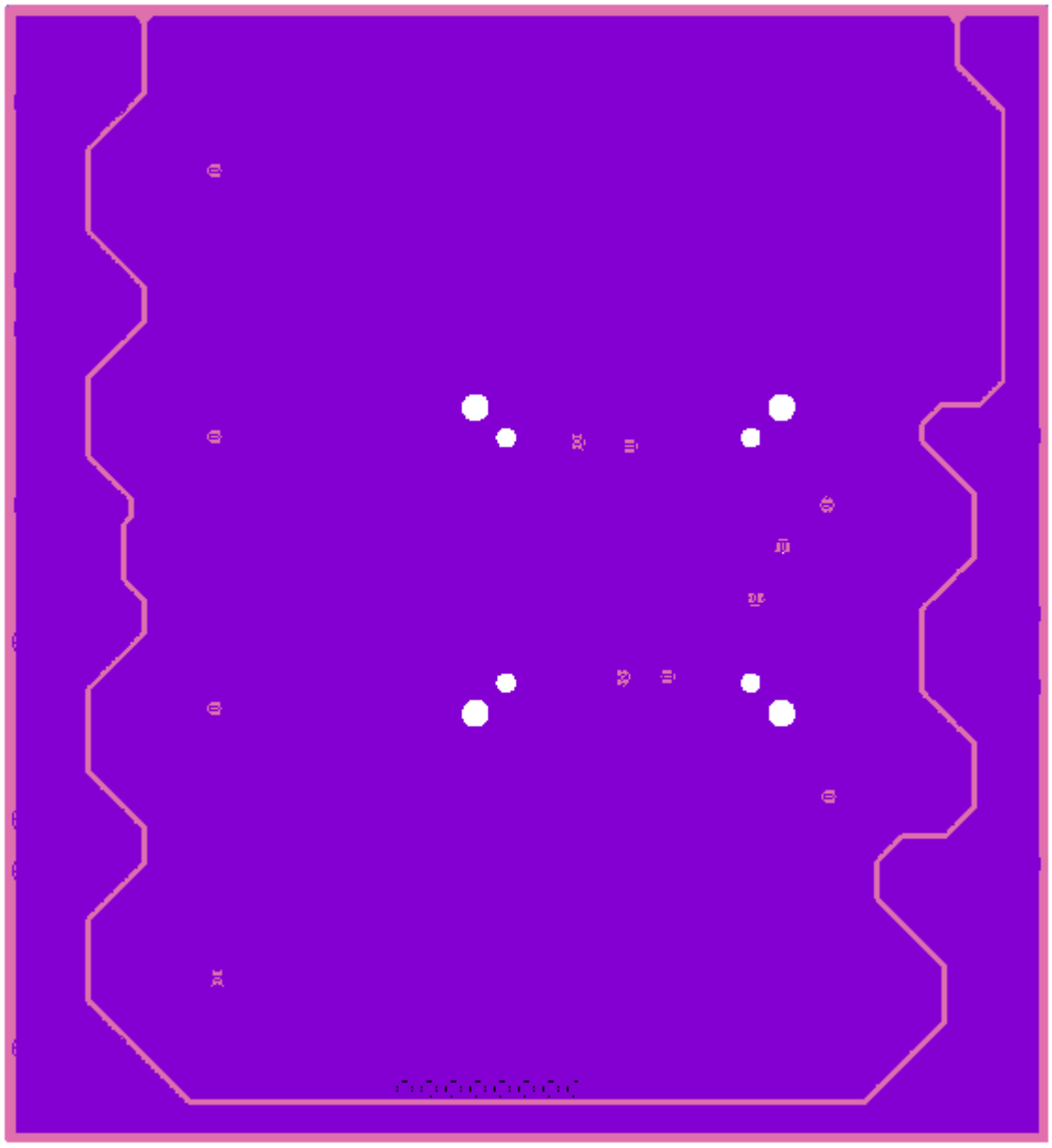

Layer 7: GND

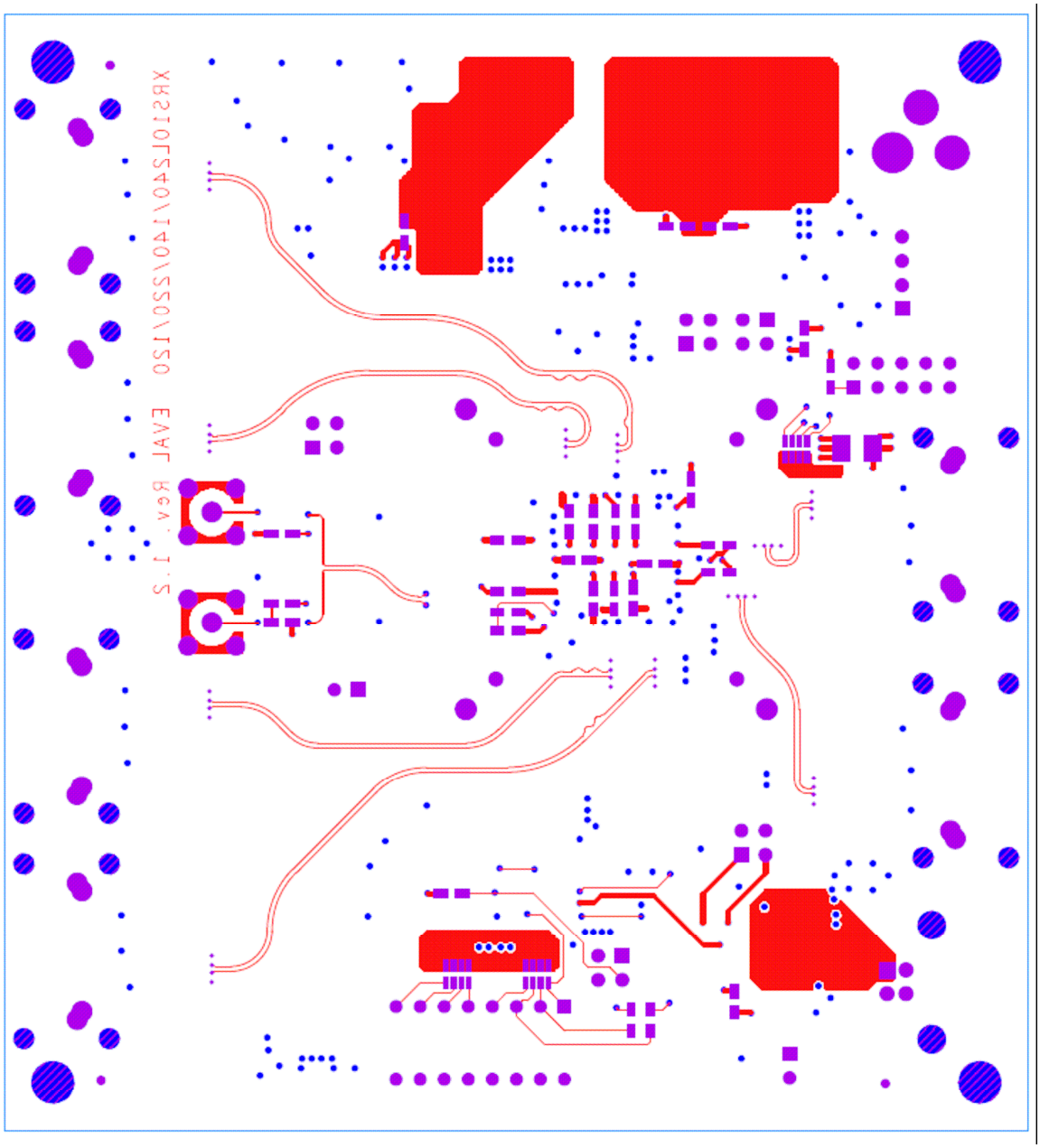

Layer 8: Bottom

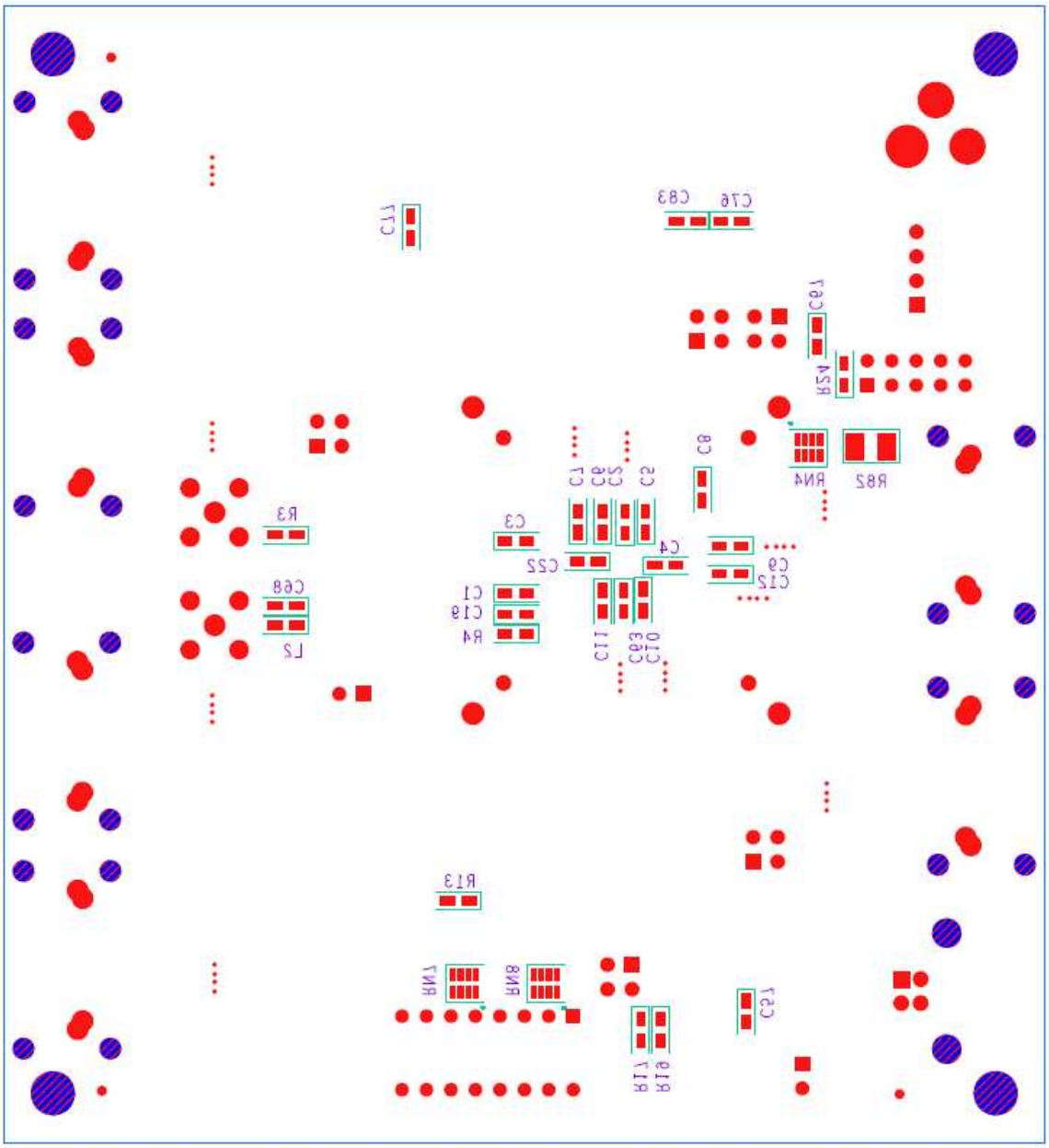

Bottom Assembly